King Slide®

3517 P型掀門鋼珠滑軌 說明書

Flipper Door Slides-P Type Installation Instruction

規格 / Specifications

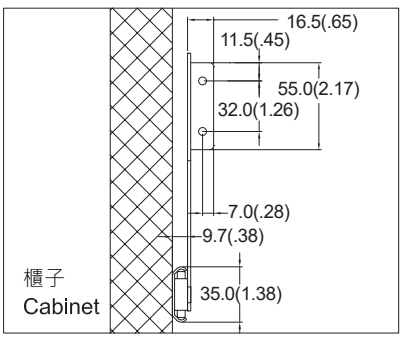

- 長度: 300mm to 700mm (12" to 28")
- 斷面: 35mm x 9.7mm
- 最大荷重 : 7kg
- 櫃門最大高度: 1000mm
- 表面處理: 鍍鋅 & 黑
- 材質: 冷軋鋼板

- Length: 300mm to 700mm (12" to 28")
- Profile: 35mm x 9.7mm
- Max. Loading Weight: 7kg
- Max. Door Height: 1000mm
- Finish: Clear Zinc
- Material: Cold Rolled Steel

尺寸規格 / Dimensional Specifications

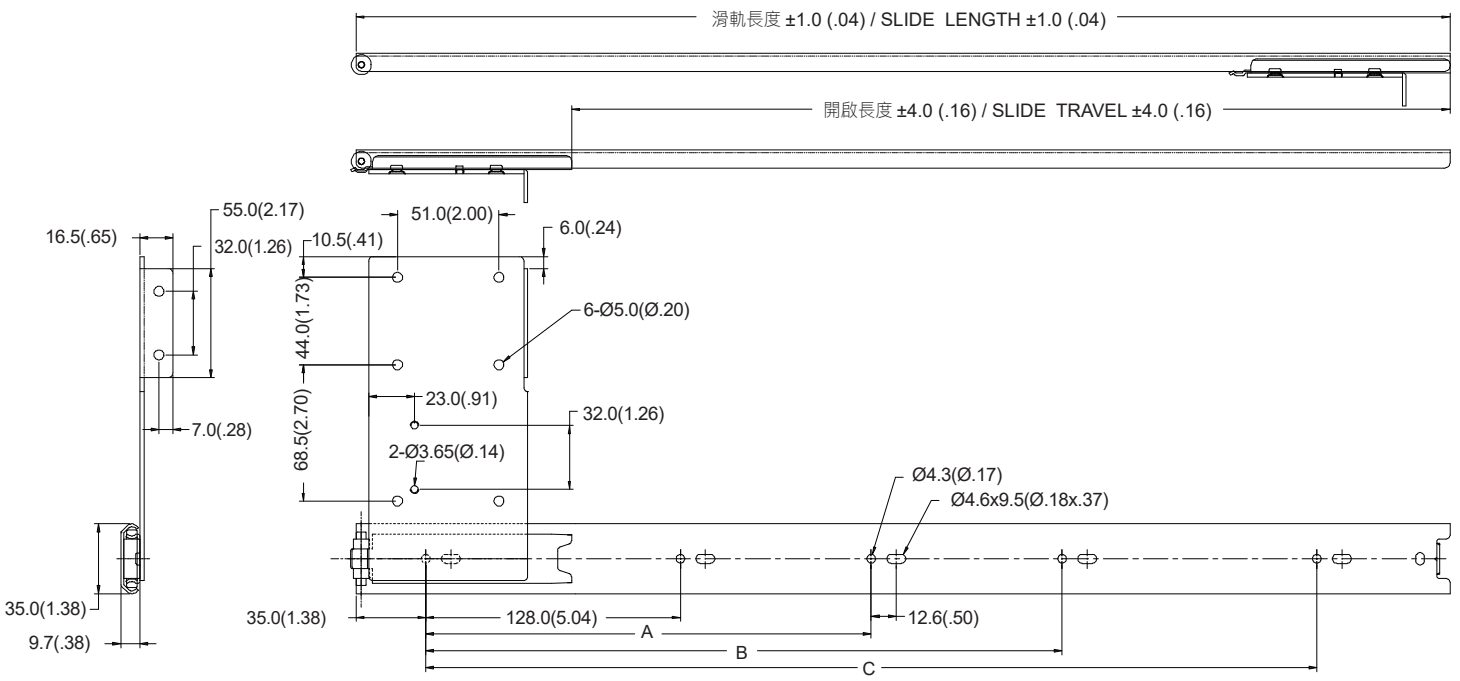

■ **特點 / Feature**

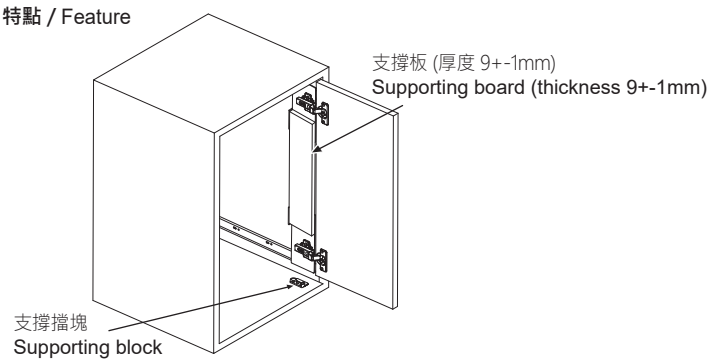

■ **鉸鏈參考數 / Number of Hinges Per Door**

請根據門板的重量與尺寸使用適當的鉸鏈數量，
並參考右圖以及底下鉸鏈荷重表。
圖中範例以重量和尺寸適用於門寬度600mm，
以及門板厚度22mm。

The number of hinges depends on the door weight.
The dimensions can be referred to the figures in the following table.
The maximum width and thickness of the door are 600mm and 22mm.

Hinge Q'ty	2	3	4	5
Load Capacity	<6.3kg (14lbs)	6.3~11kgs (14~24lbs)	11~14.4kg (24~32lbs)	14.4~18kg (32~40lbs)

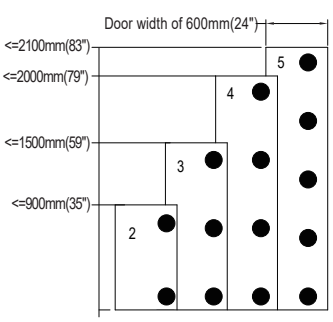

■ **正視圖 / Front View**

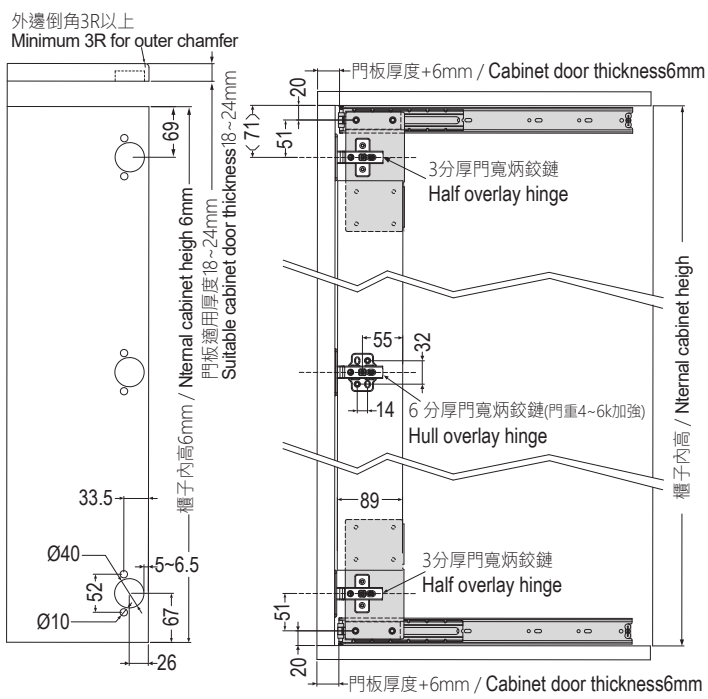

* Note : King Slide有權變更目錄中所示之產品規格。 實品可能會與圖中所示不同，若兩者相異時，請以最終實品為準，謝謝。